Reversible plate compactors

A series of reversible plates with an operating width of **600mm**, offer robustness and compact size, and are easy to operate on any construction site.

IMPACT series are equipped with low vibration-isolating handles, ergonomically designed and comfortable.

This equipment combines high efficiency, speed and depth of compaction. The hydraulic servo-control acts on the vibrating element, providing smooth uniform movement and easy driving. The low vibration handle constitutes one of the most important advantages of this plate.

It is fixed on specially designed shock absorbing blocks with exceptional compaction parameters (strength centrifuge: 30 kN), providing excellent results for the compaction of granular materials in trenches, foundation and road repair projects.

FEATURES AND BENEFITS

- Lifelong lubricated bearings for extended service life.
- Exciter bearing design requires minimal maintenance for improved productivity.
- Strong V-belt cover.
- 30 kN excentric element.
- Convenient single lifting point.
- Standard engine: Honda 4-stroke or Hatz Diesel.
- Engine with oil alert on all models.
- Option: electric start.
- Low hand-arm vibration handle.





MOULDED BOTTOM PLATE



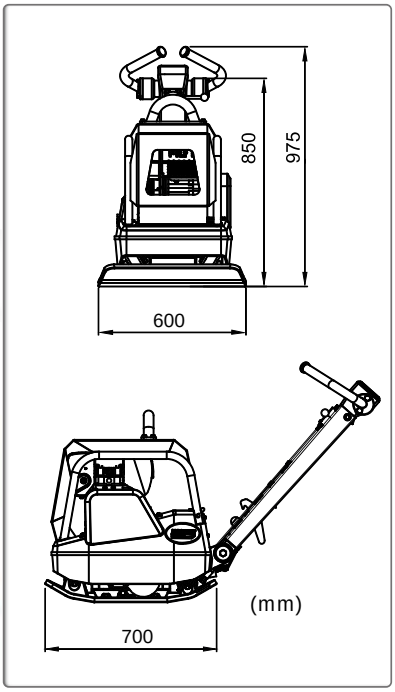

TÜVRheinland®

Powered by HATZ DIESEL

Code	IMP200D	IMP230DEHS
Model	IMPACT 200	IMPACT 230
Engine	Hatz 1B20	Hatz 1B20
Net power hp (kW)	4,6 (3,5)	4,6 (3,5)
Max. Engine speed (rpm/min)	3300	3300
Plate dimensions L x W (mm)	700 x 600	700 x 600
Operating weight (kg)	230	238
Centrifugal force (kN)	30	30
Operating speed (m/min)	21	21
Compacted area (m²/h)	630	630
Frequency (Hz)	90	90
Start	Manual	Electric
Vibrations* m/sec²/utilisation (hrs)	3,5/4,33	2,8/4,33
Sound pressure level dB (A)	105	105
* Minimum vibration levels measured to EN500-4		
Certified power SAE J 1349		

IMPACT 230 with electric starter



Handle with integrated electric starter box



Low hand-arm vibration handle